Rich Mathematical Task – Grade *4* – *Equality Possibilities!*

Task Overview/Description/Purpose:
• The purpose of this task is for students to demonstrate their understanding of equality using balanced equations. Students will use at least two equivalent expressions to create an equivalent equation using any combination of addition, subtraction, multiplication, and division. • Prior to this task, students will have had experiences creating equivalent expressions using addition, subtraction, and multiplication.

Standards Alignment: Strand - *Measurement*
Primary SOL: 4.16 The student will recognize and demonstrate the meaning of equality in an equation. **Related SOL:** 5.19bc, 3.17, 2.17
Learning Intention(s): • **Content** - I am learning to demonstrate equality in an equation. • **Language** - I am learning to explain my strategies for creating an equivalent equation. • **Social** - I am learning to give and receive feedback about my mathematical thinking.
Success Criteria (Evidence of Student Learning): • I can write equations that are equivalent using a variety of operations. • I can communicate my mathematical thinking and reasoning to my peers using the mathematical language of equality. • I can use at least one representation to support my mathematical thinking of equality. • I can make connections between different representations of mathematical thinking.

Mathematics Process Goals	
Problem Solving	• Students will choose an appropriate and efficient problem solving strategy to write equivalent expressions. • Students will accurately apply the strategy to obtain at least one valid solution.
Communication and Reasoning	• Students will communicate their thinking process for creating equivalent expressions. • Students will demonstrate sound reasoning and justify solution steps in an organized and coherent manner. • Students will use appropriate mathematical language to express ideas, including equal, equivalent, etc.
Connections and Representations	• Students will use at least one clear and appropriate representation to explore and model the problem. • Students will describe connections between their representation and the representations of their peers. • Students will make connections and/or extensions to other mathematical ideas.

Task Pre-Planning
Approximate Length/Time Frame*:* 60 minutes
Grouping of Students: Students will begin working on the task independently for approximately 5 minutes. Then students will be partnered in groups of 2-3 students based on teacher monitoring and recording of strategies on the Planning for Discourse sheet.

Rich Mathematical Task – Grade *4 – Equality Possibilities!*

Materials and Technology:	**Vocabulary:**
• task copies • paper, pencils • cubes/counters • number balances • online number balance • calculators	• expression • equation • equivalent • equal/not equal • = symbol/≠ symbol
Anticipate Responses: See the Planning for Mathematical Discourse Chart (columns 1-3).	

Task Implementation (Before) 5-10 minutes

Task Launch:

- **Activate prior knowledge**: Access students' prior knowledge and understanding of the equal sign by doing a short "Notice and Wonder" activity. Project the balanced and unbalanced scale graphic. Ask students what they notice and wonder about the two scales. Give students a minute to observe. Then have students "Turn and Talk" to discuss what they notice and what they wonder. Record what students notice and wonder on chart paper or on the board. Possible responses: The scale on the left is unbalanced or not equal. You can tell because one side is lower or higher than the other. The scale on the right is balanced because both sides of the scale are even or level. Ask students what symbols we could use to represent the two scales.
- **Be sure the task is understood**: Allow students to read the task. Then read the task aloud to students. Ask students to "Turn and Talk" to restate what the task is asking without giving any answers or examples. Possible student response: "We need to create an equivalent equation using two facts. We can use any combination of addition, subtraction, multiplication, and division." Share with students the "I Can Statements" so that they are aware of the expectations in solving the task. Tell students that they may create and prove their equivalent equations in a variety of ways (i.e., calculator, number balance, balance scale, picture or another way).
- **Establish clear expectations**
    - Directions:
        1. For about 5 minutes I will give you time to think about and work on this task independently.
        2. While you are working I will walk around and make a note of the strategies you are using and I may ask you a question.
        3. Then I will ask you to stop and work with a partner or partners based on the work I see you doing. I encourage you to discuss your strategies and ask your partners questions so that you can better share your work with the class.
        4. Ask students if they have questions. Some students may ask if they can only use a digit one time or if they have to use 1 digit numbers. They may use digits and operations multiple times. They may repeat an operation. They may also use multi-digit numbers.

Task Implementation (During) 20-30 minutes

Directions for Supporting Implementation of the Task

- Monitor – Teacher will listen and observe students as they work on task and ask assessing or advancing questions (see Question Matrix attached).
- Select – Teacher will decide which strategies or thinking will be highlighted (after student task implementation) that will advance mathematical ideas and support student learning.
- Sequence – Teacher will decide the order in which student ideas will be highlighted (after student task implementation).
- Connect – Teacher will consider ways to facilitate connections between different student responses.

Suggestions For Additional Student Support

- Students with weaknesses in language understanding could benefit from sentence frames such as:
  - The strategy I will use to determine an equivalent equation is _____.
  - I agree/disagree with _____'s strategy because _____.
  - I know the equation is equivalent or balanced because _____.
- Students with weaknesses in memory and vocabulary could benefit from:
  - Anchor chart and/or Word Wall cards to reference terms and symbols: equal/ not equal and equivalent
- Students showing difficulty with visual-spatial skills may benefit from:
  - Provide cubes or other manipulatives for students to model with using a balance scale.
  - Provide student number balances for students who need to use a concrete model to solve.
  - Provide a student sheet for those students who need a structure to record their equations.

Task Implementation (After) 20 minutes

Connecting Student Responses (From Anticipating Student Response Chart) and Closure of the Task:

- Based on student responses, sequence and select particular students to present their mathematical work during class discussion. Some possible mathematical ideas to highlight could include:
  - A common misconception
  - Trajectory in sophistication in student ideas (i.e. concrete to abstract)
  - Equations that demonstrate a property such as the commutative property of addition and multiplication, the addition property for 0
  - Several different solutions for the same task such as equations using the same operation and equations using different operations.
- Connect different students' responses and connect the responses to the key mathematical ideas to bring closure to the task. Possible questions and sentence frames to connect student strategies:
  - How are these strategies alike? How are they different?
  - How is _____'s strategy like _____'s strategy?
- Consider ways to ensure that each student will have an equitable opportunity to share his/her thinking during task discussion.
  - Students can do a Think/Pair/Share with another group to share their equations and strategies.
  - Students can do a Gallery Walk to see all strategies after you highlight specific strategies.
- Close the lesson by returning to the success criteria. Have students reflect on their progress toward the criteria.

Teacher Reflection About Student Learning:

- Student understanding of the content through the use of the process goals will be assessed (i.e., task rubric) using:
  - Task Rubric
  - Self-Assessment through I Can Statements
- Evidence provided through student work that will inform further instruction may include:
  - Teacher use the chart with anticipated student solutions to monitor which students are using which strategies. This will include: possible misconceptions, learning trajectories and sophistication of student ideas, and multiple solution pathways. Next steps based on this information could include:
    - Informing sequence of tasks. What will come next in instruction to further student thinking in balancing equations?
    - Informing small groups based on misconceptions that are not addressed in sharing.
    - Informing small groups based on movement along the learning trajectory/growing in sophistication of ideas (i.e. concrete to abstract)

- After task implementation, the teacher will use the Process Goals rubric to assess students' strengths and areas for growth in process goals. This could be a focus on one category. Next steps based on this information could include:
    - Informing sequence of tasks. What will come next in instruction to further student engagement in the process goal(s)?
    - Informing small groups based on where students are in engagement in the process goal(s) (i.e. sentence frames for communication, graphic organizers, strategic grouping, manipulative support, etc.).

Name _____ Date _____

Equality Possibilities

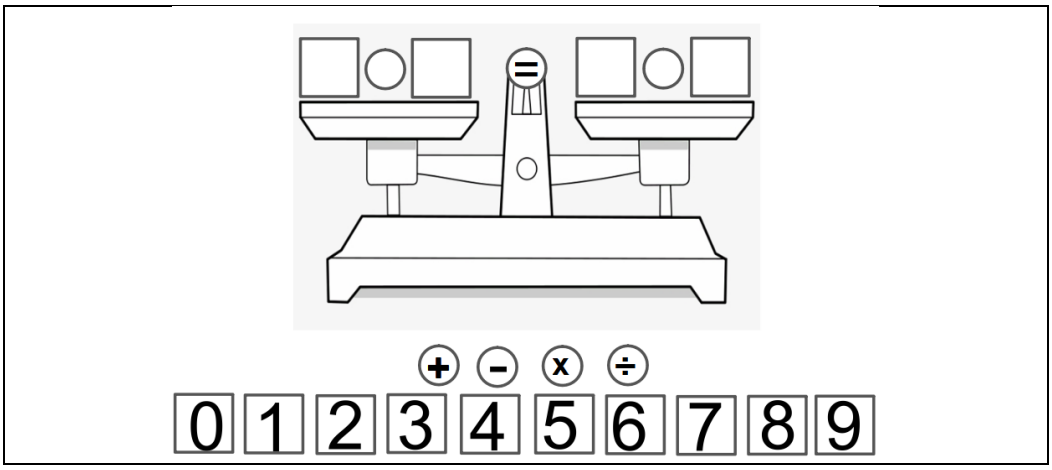

- What numbers and operations would make this equation true?
- How many possibilities can you come up with? Show more than one way.
- Show your thinking using pictures, words, and symbols.

Name _____ Date _____

Equality Possibilities-Keep Thinking!

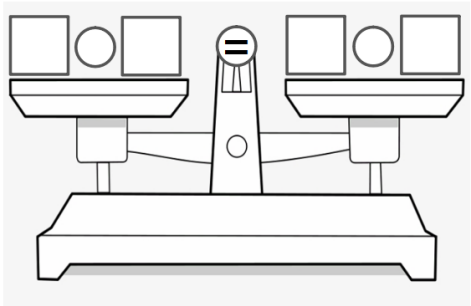

+ − x ÷

0 1 2 3 4 5 6 7 8 9

1. Can you show your strategy for creating equivalencies? What helped you?

2. Can you model why your equation is equivalent with a number line or another model?

3. Where would the use of equivalencies be important in your life? Explain.

Rich Mathematical Task – Grade *4 – Equality Possibilities!*
Planning for Mathematical Discourse

Mathematical Task: ____Equality Possibilities_____ Content Standard(s): ____SOL 4.16____

Teacher Completes Prior to Task Implementation			**Teacher Completes During Task Implementation**	
Anticipated Student Response/Strategy *Provide examples of possible correct student responses along with examples of student errors/misconceptions*	**Assessing Questions – Teacher Stays to Hear Response** *Teacher questioning that allows student to explain and clarify thinking*	**Advancing Questions – Teacher Poses Question and Walks Away** *Teacher questioning that moves thinking forward*	**List of Students Providing Response** *Who? Which students used this strategy?*	**Discussion Order - sequencing student responses** ● *Based on the actual student responses, sequence and select particular students to present their mathematical work during class discussion* ● *Consider ways to ensure that each student will have an equitable opportunity to share his/her thinking during task discussion*
Anticipated Student Response: *Common Misconception Students view the equal sign to mean "the answer is" and may create a problem such as: 5 + 4 = 9 + 2	• Tell me about your thinking. • Can you tell me how these two expressions are equivalent? How do you know? • What does it mean to be equivalent? • What does the equal symbol mean?	• Could your partner write down your process as you say it? • Could you use a drawing or representation to prove your thinking? • How could you use a number balance to support your work? • How could you use a calculator to support your work?	See Student Work Sample B	
Anticipated Student Response: Student is limited to one example. They may use the same digits or just addition and subtraction. 2 + 3= 3 + 2	• Tell me about your thinking. • Can you explain how you figured out the equivalence? • Can you prove this equation is equivalent?	• Why does this work? Could your partner write down your process as you say it? • Can you think of another example? (If commutative property) Does it always work? Can you try it with other digits? • Can you use other digits besides ___ and ____ to make _____? • What about other operations besides addition or subtraction? • Could you use a drawing or representation to prove your thinking?	See Student Work Sample C and E	

Rich Mathematical Task – Grade *4* – *Equality Possibilities!*

Teacher Completes Prior to Task Implementation			**Teacher Completes During Task Implementation**	
Anticipated Student Response/Strategy *Provide examples of possible correct student responses along with examples of student errors/misconceptions*	**Assessing Questions – Teacher Stays to Hear Response** *Teacher questioning that allows student to explain and clarify thinking*	**Advancing Questions – Teacher Poses Question and Walks Away** *Teacher questioning that moves thinking forward*	**List of Students Providing Response** *Who? Which students used this strategy?*	**Discussion Order - sequencing student responses** ● *Based on the actual student responses, sequence and select particular students to present their mathematical work during class discussion* ● *Consider ways to ensure that each student will have an equitable opportunity to share his/her thinking during task discussion*
		• Is there another method or model that you could use to show the equivalence? Calculator? Number balance?		
Anticipated Student Response: Students use 0 and a digit every time when adding or subtracting. Students may use 1 to multiply or divide a number. 6 + 0 = 0 + 6	• Tell me about your thinking. • Why does that work? Can you use a representation to prove it (picture, number line, hundreds chart, etc.)?	• Does it always work? Why? Can you think of another example? • Can you use a digit other than 0 or 1 to create an equivalent expression? • Is there another method you could use to prove your thinking? Calculator? Picture? Number balance?		
Anticipated Student Response: Student can produce several correct examples but does not prove or has a limited explanation of why it is equivalent. The student may lack representations or connections to other mathematics.	• Tell me about your thinking. • What makes this equivalent? • What strategy did you use for creating equivalencies? • How are your expressions alike? How are they different?	• Is there another method you could use to prove your thinking? Number Line? Calculator? Picture? Number balance? • Do you notice any patterns in your equations? Explain. • What vocabulary or symbols are important in your work?	See Student Work Samples A, D, F, and G	

Rich Mathematical Task – Grade *4* – *Equality Possibilities!*

Rich Mathematical Task Rubric

	Advanced	Proficient	Developing	Emerging
Mathematical Understanding	Proficient Plus: • Uses relationships among mathematical concepts	• Demonstrates an understanding of concepts and skills associated with task • Applies mathematical concepts and skills which lead to a valid and correct solution	• Demonstrates a partial understanding of concepts and skills associated with task • Applies mathematical concepts and skills which lead to an incomplete or incorrect solution	• Demonstrates little or no understanding of concepts and skills associated with task • Applies limited mathematical concepts and skills in an attempt to find a solution or provides no solution
Problem Solving	Proficient Plus: • Problem solving strategy is efficient	• Problem solving strategy displays an understanding of the underlying mathematical concept • Produces a solution relevant to the problem and confirms the reasonableness of the solution	• Chooses a problem solving strategy that does not display an understanding of the underlying mathematical concept • Produces a solution relevant to the problem but does not confirm the reasonableness of the solution	• A problem solving strategy is not evident or is not complete • Does not produce a solution that is relevant to the problem
Communication and Reasoning	Proficient Plus: • Reasoning is organized and coherent • Consistent use of precise mathematical language and accurate use of symbolic notation	• Communicates thinking process • Demonstrates reasoning and/or justifies solution steps • Supports arguments and claims with evidence • Uses mathematical language to express ideas with precision	• Reasoning or justification of solution steps is limited or contains misconceptions • Provides limited or inconsistent evidence to support arguments and claims • Uses limited mathematical language to partially communicate thinking with some imprecision	• Provides little to no correct reasoning or justification • Does not provide evidence to support arguments and claims • Uses little or no mathematical language to communicate thinking
Representations and Connections	Proficient Plus: • Uses representations to analyze relationships and extend thinking • Uses mathematical connections to extend the solution to other mathematics or to deepen understanding	• Uses a representation or multiple representations, with accurate labels, to explore and model the problem • Makes a mathematical connection that is relevant to the context of the problem	• Uses an incomplete or limited representation to model the problem • Makes a partial mathematical connection or the connection is not relevant to the context of the problem	• Uses no representation or uses a representation that does not model the problem • Makes no mathematical connections

Task Supporting Documents-Notice and Wonder Launch

- **What do you notice about these two scales?**

- **How are they alike? How are they different?**

Task Supporting Documents- Equation Organizer

□ ○ □ = □ ○ □
Justify:
□ ○ □ = □ ○ □
Justify:
□ ○ □ = □ ○ □
Justify: